30V 1.1mohm N-channel SGT MOSFET

AKG30N011G

Description:

This N channel SGT MOSFET has been designed to ultra-low on-state resistance (R_{DSON}) and yet maintain superior switching performance, especial for high efficiency power management applications.

Features:

- N-channel, optimized for high-speed smooth switching
- Excellent Gate Charge × R_{DSON} (FOM)
- Ultra-low on-resistance
- RoHS compliant (Note 1)
- Halogen-free (Note 1)

Applications:

- DC-DC Conversion
- Power Tools
- Motor Driving
- Power Management

Key Performance Parameters:

Parameter	Value	Unit
V_{DS}	30	V
$R_{DSON,\ max}$@V_{GS}=10V	1.1	mΩ
I_D	203	A

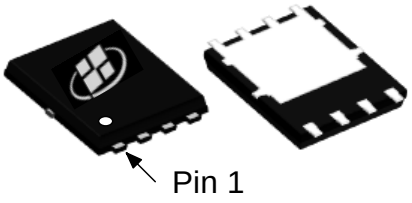

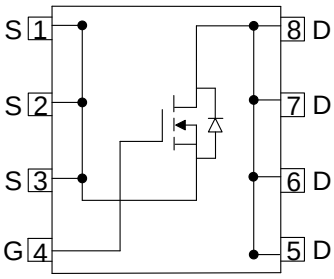

Ordering Information:

Ordering Code	Package Type	Marking Code	Form	Packing
AKG30N011G	PDFN5X6-8L	AKG30N011G	13 inches Reel	5000

Notes:

1. Contact ALKAIDSEMI sales for detail information

Maximum Ratings(T_A = 25℃ unless otherwise noted)

Symbol	Parameter	Value	Units
V_{DS}	Drain-Source Voltage	30	V
I_D	Drain Current - Continuous (T_C = 25°C) (Note 1)	203	A
	Drain Current -Continuous (T_C = 100°C) (Note 1)	128	A
I_{DM}	Drain Current - Pulsed (Note 2)	600	A
V_{GS}	Gate-Source Voltage	± 20	V
E_{AS}	Single Pulsed Avalanche Energy (Note 3)	306	mJ
P_D	Power Dissipation (T_C = 25°C)	65.7	W
T_J, T_{STG}	Operating and Storage Temperature Range	-55 to +150	ºC

Thermal Characteristics

Symbol	Parameter	Value	Units
$R_{\theta JC}$	Thermal Resistance, Junction-to-Case, Steady-State	1.9	°C/W
$R_{\theta JA}$	Thermal Resistance, Junction-to-Ambient (Note 4) Steady-State	41	°C/W

Notes:

1. The max drain current rating is package limited
2. Repetitive Rating: Pulse width limited by maximum junction temperature
3. L = 0.5 mH, V_{DD} = 15 V, I_{AS} = 35 A, R_G = 25 Ω, Starting T_J = 25 °C
4. Mount on 1 inch X 1 inch 2 oz FR-4 copper PCB
5. Pulse Test: Pulse width ≤ 300 us, Duty cycle ≤ 2%
6. Essentially independent of operating temperature

Electrical Characteristics (T_J = 25°C unless otherwise noted)

Symbol	Parameter	Test Conditions	Min	Typ	Max	Units
Static Characteristics						
BV_{DSS}	Drain-Source Breakdown Voltage	V_{GS} = 0 V, I_D = 250 μA	30			V
I_{DSS}	Zero Gate Voltage Drain Current	V_{DS} = 30 V, V_{GS} = 0 V			1	μA
I_{GSS}	Gate Leakage Current	V_{GS} = ±20 V, V_{DS} = 0 V			±100	nA
$V_{GS(TH)}$	Gate Threshold voltage	V_{DS} = V_{GS}, I_D = 250 μA	1	1.7	2.4	V
$R_{DS(On)}$	Drain-Source on-state resistance	V_{GS} = 10 V, I_D = 30 A		0.9	1.1	mΩ
		V_{GS} = 4.5 V, I_D = 25 A		1.5	1.8	mΩ
g_{FS}	Forward Transconductance	V_{DS} = 5 V, I_D = 10 A (Note 5)	-	76	-	S
Dynamic Characteristics						
C_{ISS}	Input capacitance	V_{DS}=15 V, V_{GS}=0 V, F = 1 MHz		3700		pF
C_{OSS}	Output capacitance			1500		pF
C_{RSS}	Reverse transfer capacitance			90		pF
R_G	Gate resistance	F = 1MHz		1		Ω
Switching Characteristics						
$T_{D(ON)}$	Turn On Delay Time	V_{DD}=15 V, I_D=30 A, V_{GS}=10 V, R_G=6 Ω (Note 5, 6)		4		ns
T_R	Rise Time			12		ns
$T_{D(OFF)}$	Turn Off Delay Time			114		ns
T_F	Fall Time			67		ns
Q_G	Total Gate Charge	V_{DD}=15 V, I_D=30 A, V_{GS}=10 V (Note 5, 6)		60.4		nC
Q_{GS}	Gate-Source Charge			9.8		nC
Q_{GD}	Gate-Drain Charge			9.7		nC
Drain-Source Diode Characteristics and Maximum Ratings						
I_S	Maximum Continuous Drain-Source Diode Forward Current				75	A
I_{SM}	Maximum Pulsed Drain-Source Diode Forward Current				400	A
V_{SD}	Diode Forward Voltage	V_{GS}= 0 V, I_S = 30 A			1.2	V
T_{RR}	Reverse recovery time	I_F=30 A, di/dt=100 A/μS		42		ns
Q_{RR}	Reverse recovery charge			35		nC

Electrical Characteristics Diagrams

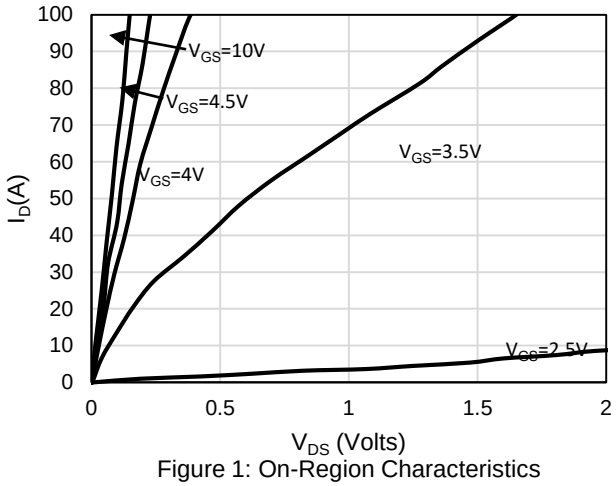

Figure 1: On-Region Characteristics

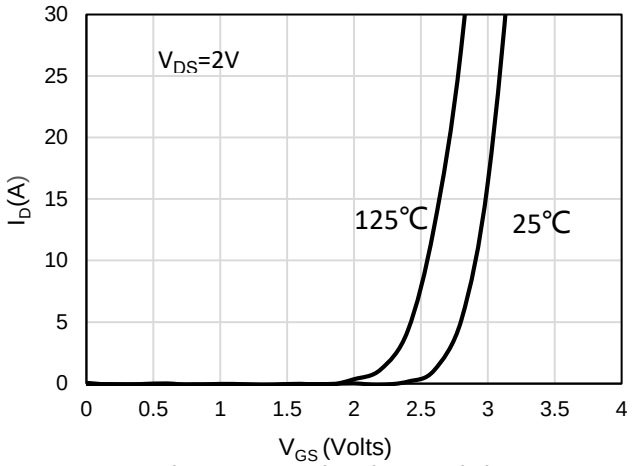

Figure 2: Transfer Characteristics

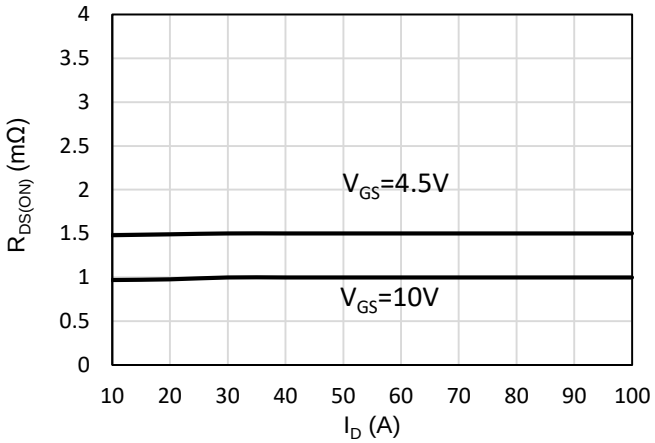

Figure 3: On-Resistance vs. Drain Current and Gate Voltage

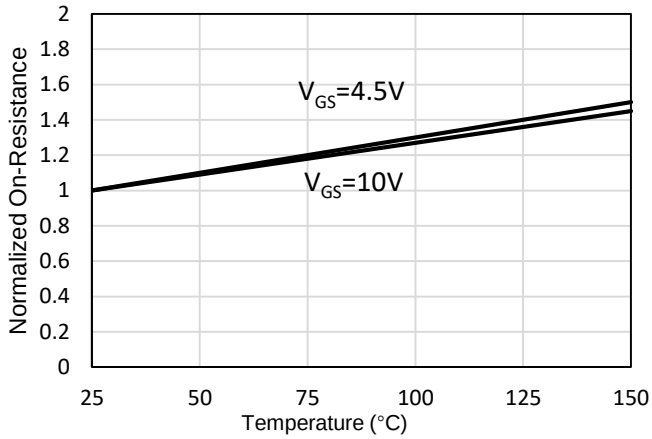

Figure 4: On-Resistance vs. Junction Temperature

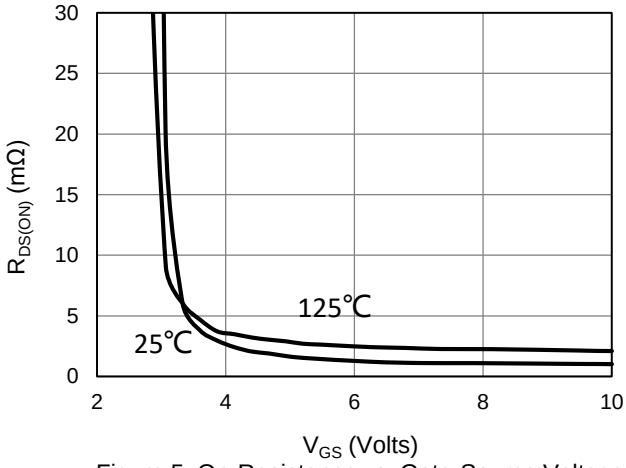

Figure 5: On-Resistance vs. Gate-Source Voltage

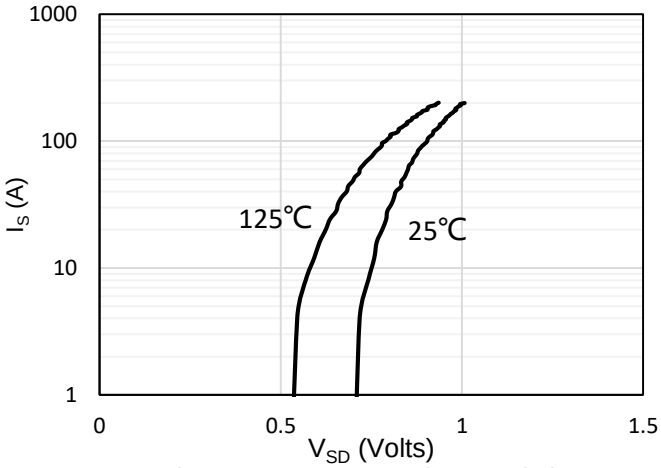

Figure 6: Body-Diode Characteristics

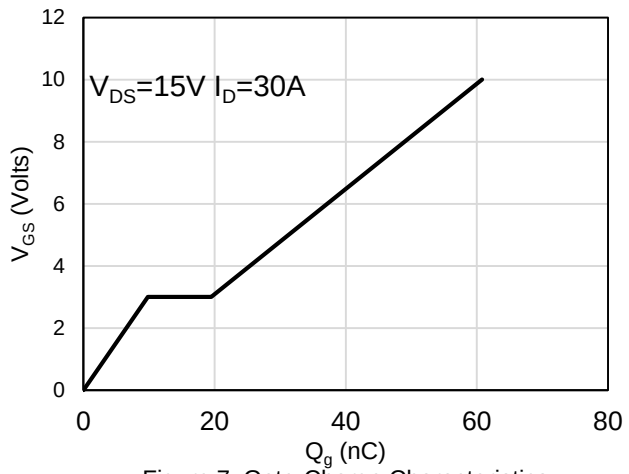

Figure 7: Gate-Charge Characteristics

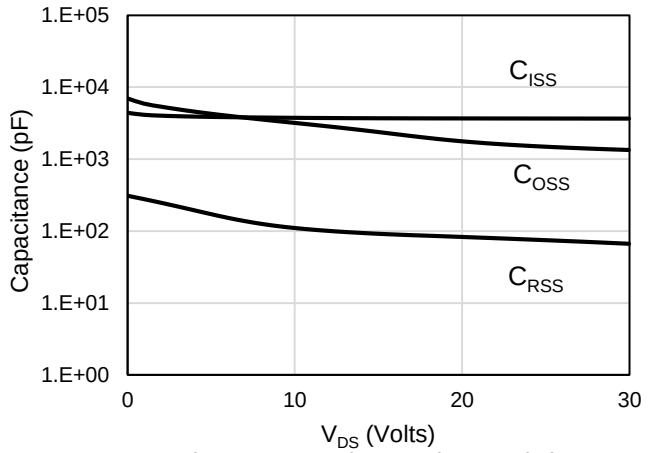

Figure 8: Capacitance Characteristics

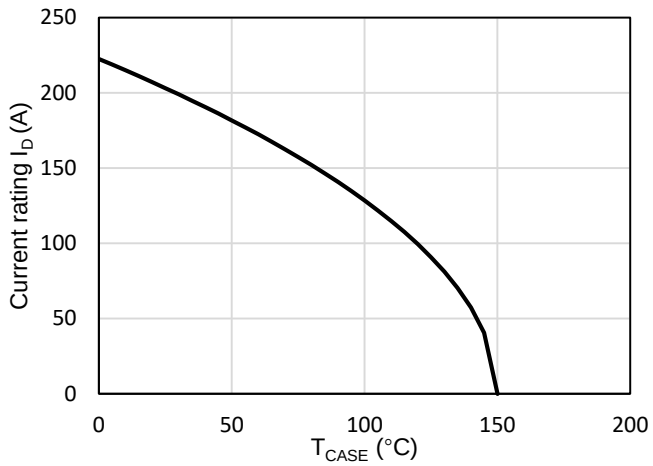

Figure 9: Current De-rating

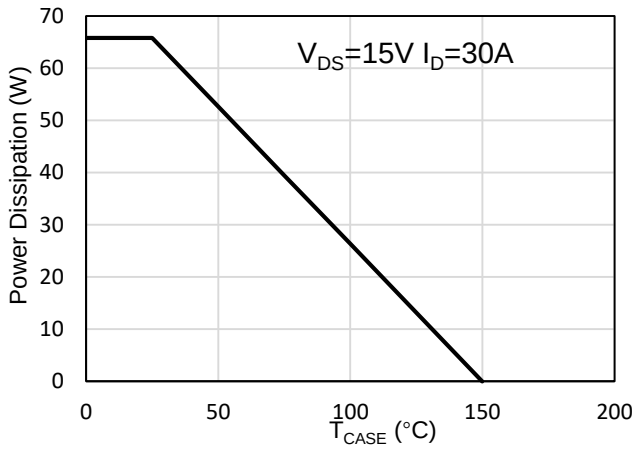

Figure 10: Power De-rating

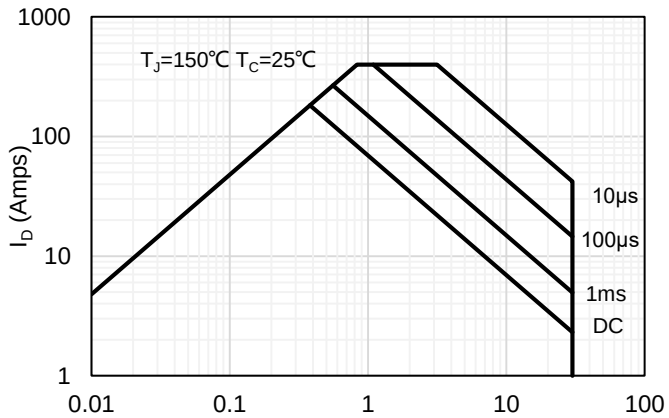

Figure 11: Maximum Forward Biased Safe Operating Area

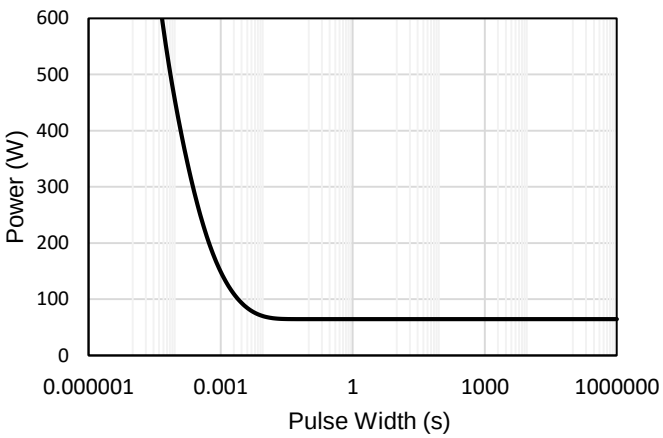

Figure 12: Single Pulse Power Rating Junction-to-Case

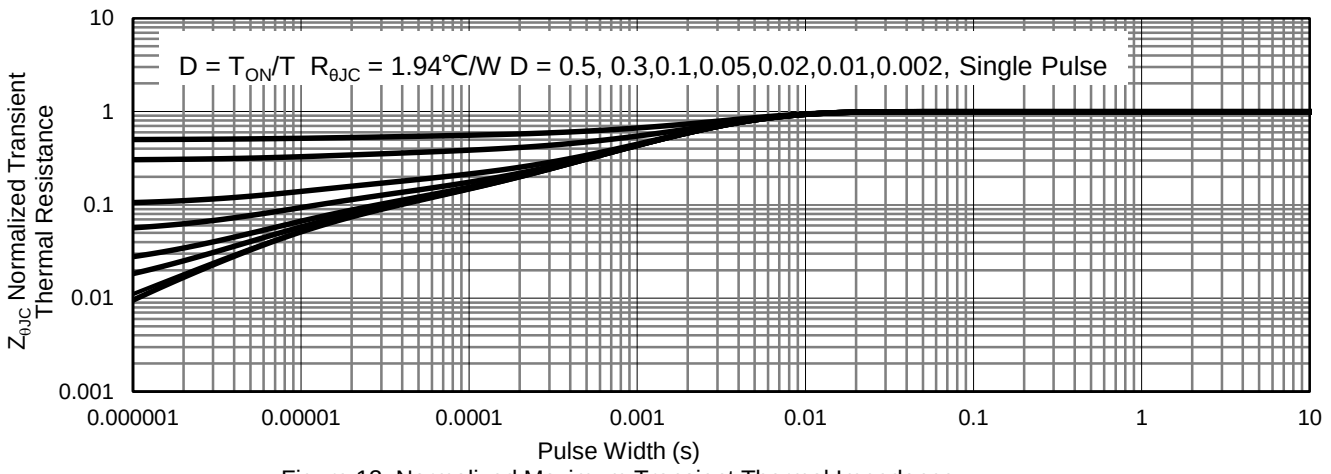

Figure 13: Normalized Maximum Transient Thermal Impedance

Test Circuit and Waveform

Gate Charge Test Circuit & Waveform

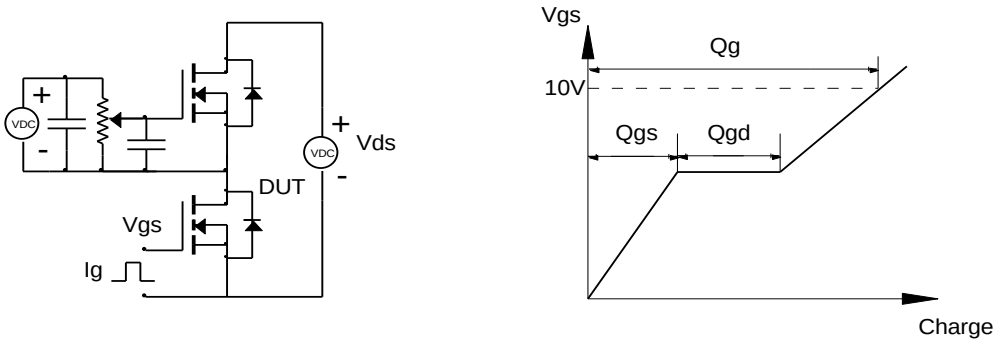

Resistive Switching Test Circuit & Waveforms

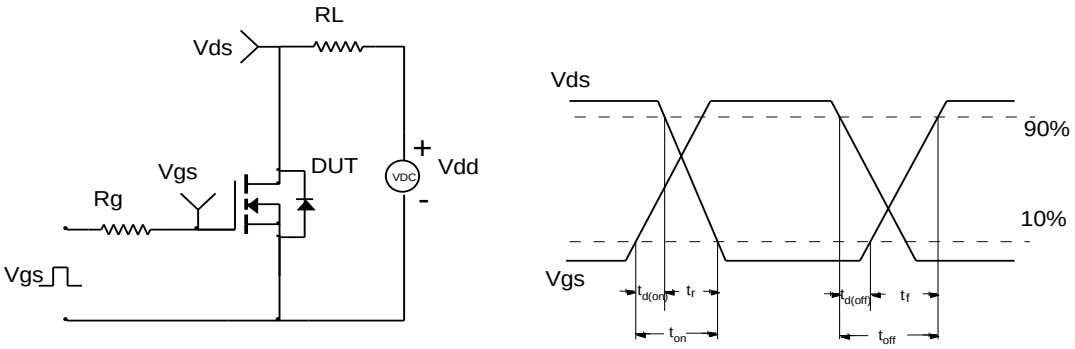

Unclamped Inductive Switching (UIS) Test Circuit & Waveforms

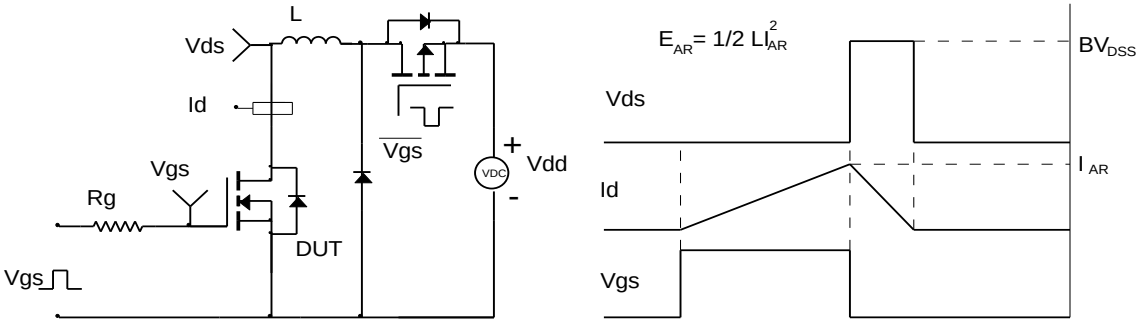

Diode Recovery Test Circuit & Waveforms

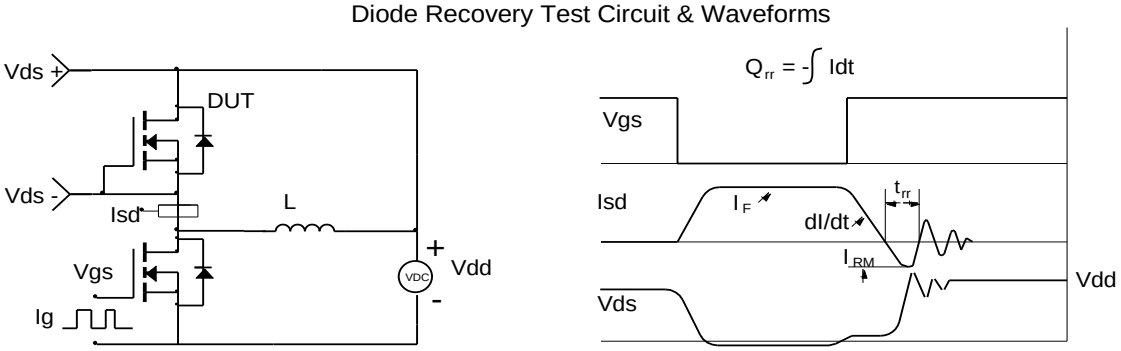

Package Outlines

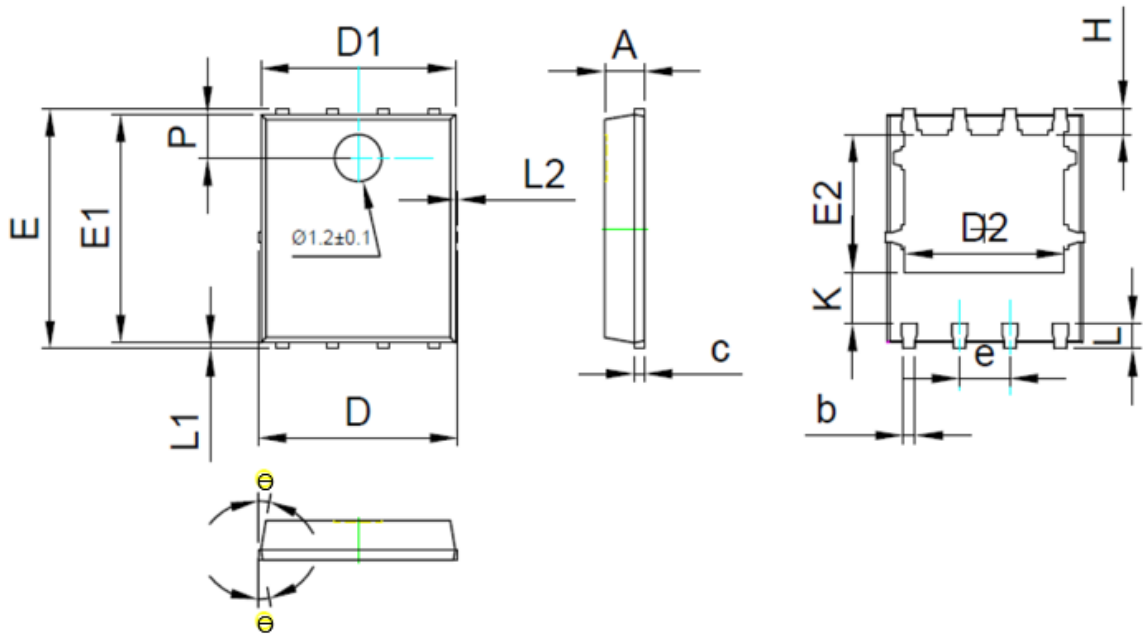

COMMON DIMENSIONS
(UNITS OF MEASURE = MILLIMETER)

SYMBOL	MIN	NOM	MAX
A	0.90	1.00	1.10
b	0.35	0.40	0.45
c	0.21	0.25	0.34
D	-	-	5.1
D1	4.85	4.90	4.95
D2	3.96	4.01	4.06
e		1.27 BSC	
E	5.95	6.00	6.05
E1	5.70	5.75	5.80
E2	3.425	3.475	3.525
H	0.60	0.65	0.70
K	1.29	-	-
L	0.60	0.65	0.70
L1	0.05	0.15	0.25
L2	-	-	0.12
θ	8°	10°	12°
P	1.05	1.10	1.15

Marking Information

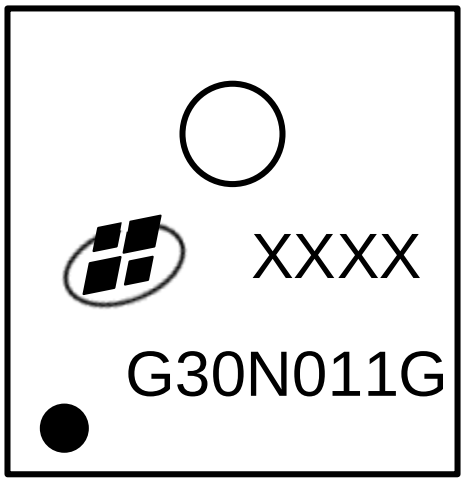

Note:
XXXX=Date code
G30N011G=Product Name Code
Contact ALKAIDSEMI sales for detail information

Reel and Tube Information

REEL DIMENSIONS

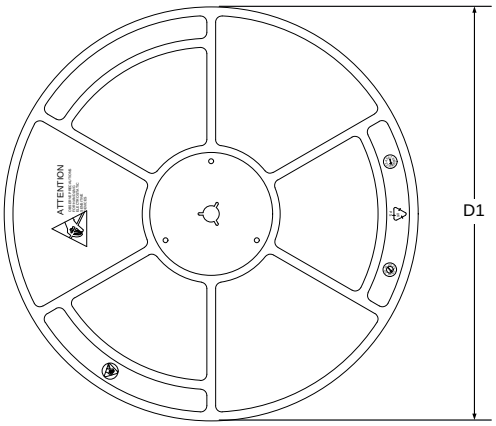

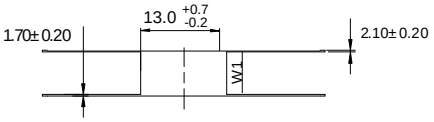

TAPE DIMENSIONS

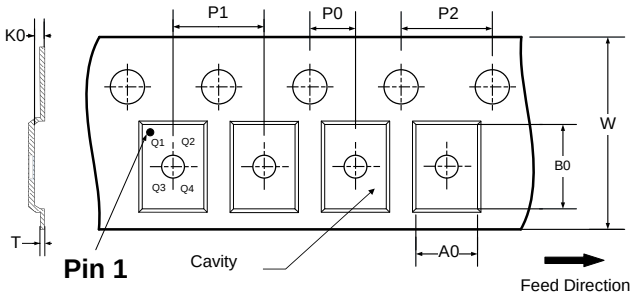

A0：Dimension designed to accommodate the component width
B0：Dimension designed to accommodate the component length
K0：Dimension designed to accommodate the component thickness
W：Overall width of the carrier tape
P0：Pitch between successive cavity centers and sprocket hole
P1：Pitch between successive cavity centers
P2：Pitch between sprocket hole
T：Tape material thickness
D1：Reel Diameter
W1：Reel Width

DIMENSIONS										(Unit: mm)
	D1	W1								Material
Reel	330	12.5								Hips
	P0	P1	P2	W	A0	B0	K0	T	Pin 1 Quadrant	Material
Tape	4	8	2	12	6.3	5.3	1.2	0.25	Q1	PC
All dimensions are nominal										

Revision History

Revision	Release Date	Remark
Rev.1.0	2021-11-09	Initial release

Disclaimer

The information given in this document describes the independent performance of the product, but similar performance is not guaranteed under other working conditions, and cannot be guaranteed when installed with other products or equipment. To achieve the required performance of the product in actual scenarios, the customer should conduct a complete application test to assess the functionality of the product.

Alkaidsemi assumes no responsibility for equipment failures result from using products at values that exceed the ratings, operating conditions, or other parameters listed in the product specifications.

The product described in this specification is not applicable for aerospace or other applications which requires high reliability. Customers using or selling these products for use in medical, life-saving, or life-sustaining applications do so at their own risk and agree to fully indemnify.

Due to product or technical improvements, the information described or contained herein may be changed without prior notice.